ATM Canopy

Model 5575

Features and Benefits

- **Prominent 4-post canopy** provides immediate branding impact
- Includes **backlit front, rear,** and **side signs** for easy identification
- Canopy includes **2 color paint scheme** with **3 color standard backlit sign**
- **Seamless, composite roof with internal drainage system** prevents leakage and eliminates unsightly streaking
- **Downlighting provided by six PAR38 flood lights producing 7800 lumens** to increase visibility for your ATM customers
- **Powder coated with an epoxy primer**
- **Pretreatment wash** in dip tank **removes all oils and other metal residue**
- Meets **seismic zone 4** requirements, **wind shear 120 mph, UL-listed**

Materials

Main canopy is made of aluminum
Posts are made of structural steel
Seamless roof is made of fiberglass composite

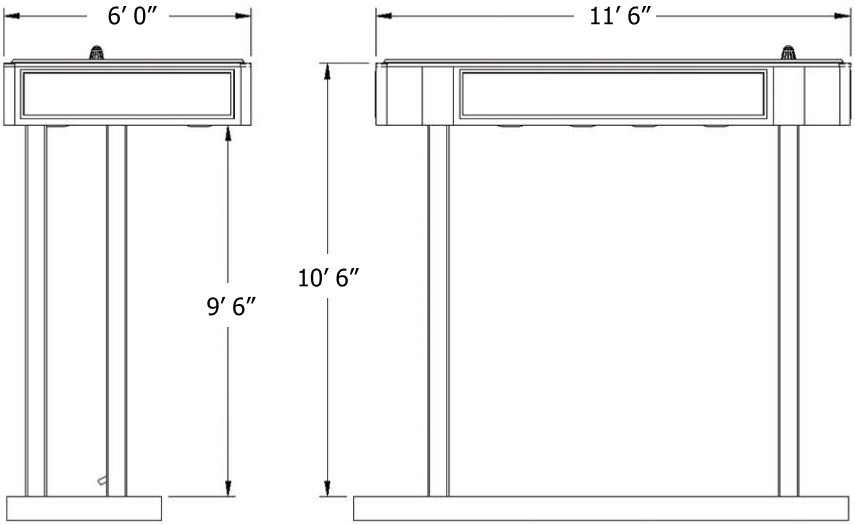

ATM Compatibility

Fits all drive-up island ATMs

COMPANION SYSTEMS™

645 West 200 North, North Salt Lake, Utah 84054 t. 800.258.8082 f. 801.936.1563 | www.companionsystems.com